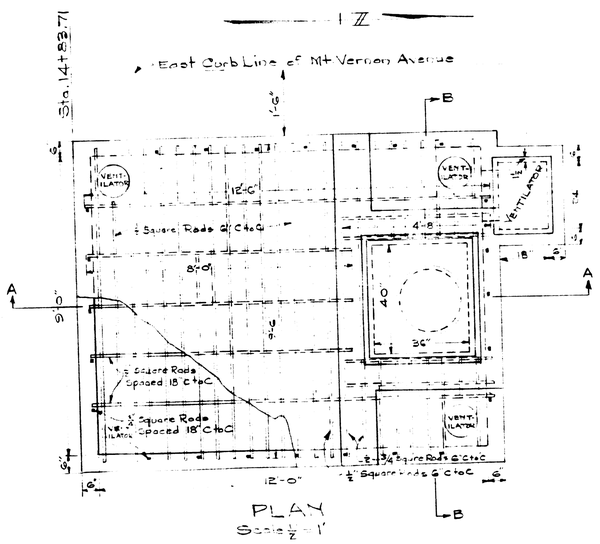

PLAN
Scale ½"=1'

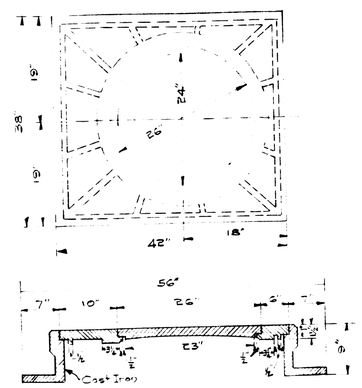

COVER AND FRAME DETAIL
Scale 1"=1'

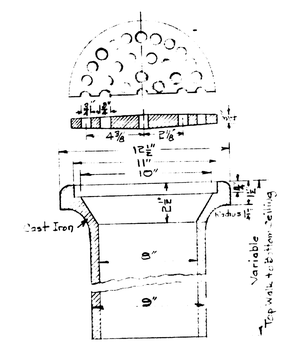

VENTILATOR CAP
Scale 2½"=1"

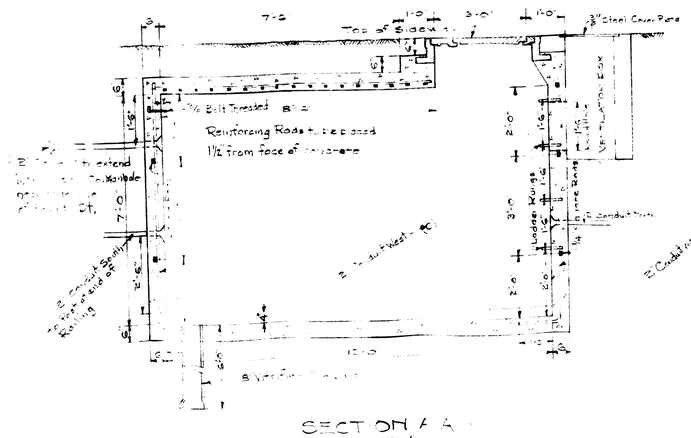

SECTION A-A
Scale ½"=1'

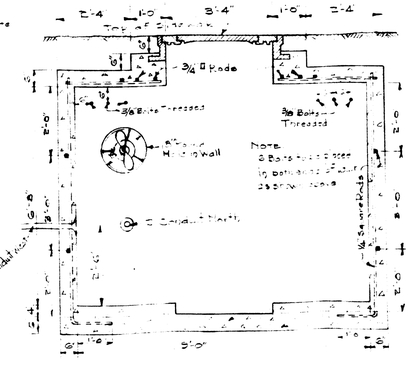

SECTION B-B
Scale ½"=1'

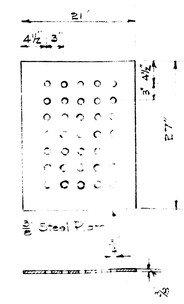

VENTILATOR BOX TOP
Scale 1"=1'

PROPOSED TRANSFORMER VAULT
AT
MT. VERNON AVE.
OCTOBER 1933
GORDON STR
CHIEF ENG

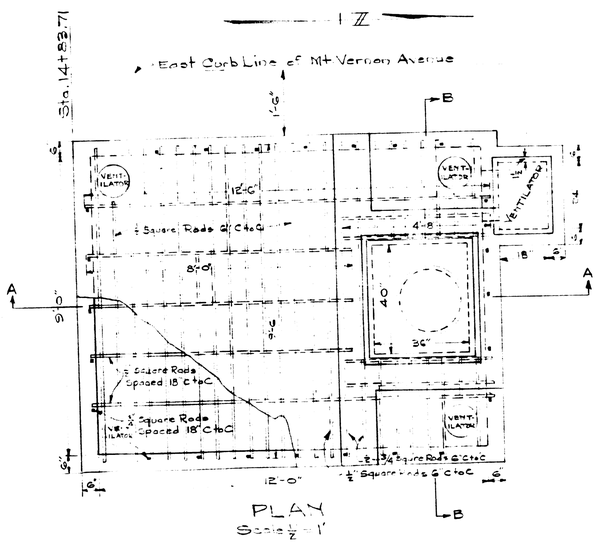

PLAN
Scale ½"=1'

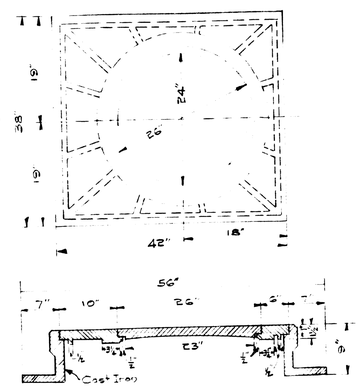

COVER AND FRAME DETAIL
Scale 1"=1'

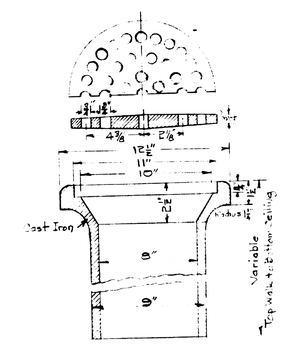

VENTILATOR CAP
Scale 2½"=1"

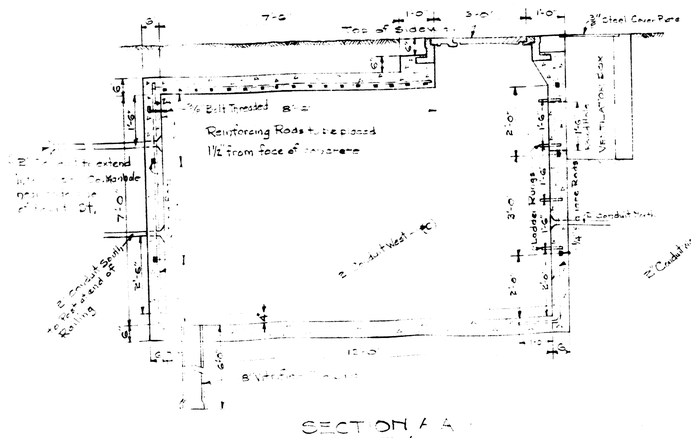

SECTION A-A
Scale ½"=1'

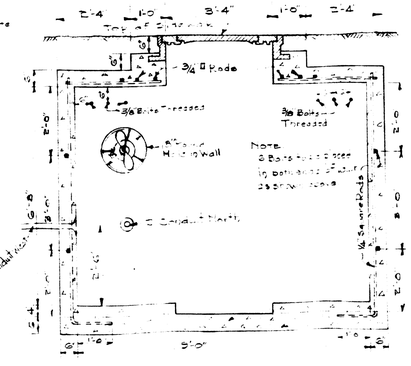

SECTION B-B
Scale ½"=1'

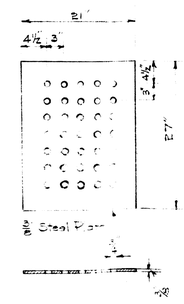

VENTILATOR BOX TOP
Scale 1"=1'

PROPOSED TRANSFORMER VAULT
AT
MT. VERNON AVE.
OCTOBER 1933
GORDON STR
CHIEF ENG